EE499 Final Year Project

Phase 2 Simulation — Detailed Activity Log

LTC1871 DC-DC Boost Converter | LTspice 24.1.3

Fortune Olose | Supervisor: Dr. Bob Lawlor | Maynooth University

Session Date: 30 March 2026 | Document compiled: 31 March 2026

1. Purpose and Scope of This Document

This document provides a detailed chronological account of all simulation activity undertaken during the Phase 2 LTspice simulation campaign for the EE499 Final Year Project. It is intended as a primary reference for the final report, documenting not only the results obtained but the iterative process by which they were achieved — including errors encountered, diagnostic steps taken, and engineering decisions made in response to simulation behaviour.

The document covers the following completed checklist items from the Phase 2 simulation programme:

1. LTspice SEPIC topology evaluation and boost decision
2. Boost topology transition — component recalculation and schematic update
3. Parametric line regulation sweep (VIN = 8 V, 9.6 V, 11 V)
4. Output voltage and ripple verification
5. Load transient simulation (0.5 A → 2.0 A motor inrush step)
6. Voltage droop and recovery time measurement
7. Inductor peak current verification against saturation limit
8. Efficiency measurement (Pin, Pout, η)

Each section documents the simulation configuration, the exact SPICE directives used, the raw output from the LTspice error log, the extracted metric values, and the engineering interpretation of each result.

2. Simulation Environment

2.1 Software and Model

Parameter	Value
Simulation Software	LTspice 24.1.3.0 for Windows
Solver	Alternate (selected for 350 kHz switching transients)
Integration Method	Trapezoidal (trap)
IC SPICE Model	LTC1871.sub (manufacturer-supplied, Analog Devices)
Netlist File	LTC1871_Improved_Model.net
File Location	C:\Users\avent\Documents\LTspice\Buck Converter Files\FYP Model\
Temperature	27°C (tnom = 27, standard operating point)
Maximum Thread Count	16

Table 2.1: LTspice simulation environment parameters

2.2 Final Component Values

The following component values were used in all simulation runs after the SEPIC-to-boost topology transition. Values represent the final Phase 1 analytical design as implemented in the LTspice schematic.

Ref.	Component	Value	Function
U1	LTC1871 IC	MSOP-10	Current mode boost controller
V1	Input source	{VIN} parameterised	3S LiPo terminal voltage
L1	Inductor (XAL6060-103MEC)	10 µH	Power storage element
D1	Schottky diode (MBR735)	35 V, 7.5 A	Output rectifier
Q1	MOSFET (IRF7811)	30 V, 12 mΩ RDS(ON)	Main power switch
C1	Output capacitor bank	2 × 150 µF (simulation)	Output filter
I1	Load current source	PWL (transient tests)	Load simulation
R1	FREQ resistor	68.1 kΩ	Sets fSW = 350 kHz
R4	Compensation RC	8.66 kΩ	Error amp zero frequency
C2	Compensation CC1	6.8 nF	Error amp zero frequency
C3	Compensation CC2	100 pF	Error amp HF pole
R3	FB top (R_top)	499 kΩ	Output voltage setting
R2	FB bottom (R_bot)	56 kΩ	Output voltage setting
C4	INTVCC bypass	4.7 µF	Gate drive supply decoupling

Table 2.2: Final component values in simulation schematic

3. Activity 1 — SEPIC Topology Evaluation and Boost Decision

3.1 Objective

The initial plan was to implement the SEPIC topology designed in Phase 1 using the LTC1871.sub SPICE model. The SEPIC was selected in Phase 1 on the grounds that it permits the output voltage to be either higher or lower than the input, providing theoretical coverage across any LiPo discharge boundary. Before proceeding with the SEPIC simulation, the operating requirements were reviewed to confirm whether the SEPIC's buck-boost capability was actually needed.

3.1.1 Rev1 Schematic — Initial Wrong-Spec Reference (LTC1871_Rev1)

Before the SEPIC topology was attempted, the starting point for the LTspice environment was the LTC1871 datasheet Figure 1 reference circuit. This circuit is designated Rev1 and uses incorrect component values for the FYP specification: VIN = 3.3 V, L1 = 1 µH, feedback divider targeting VOUT ≈ 5 V (R2=12kΩ, R3=36.8kΩ), RT = 80.6 kΩ (300 kHz), RC = 22 kΩ, CC2 = 50 pF, and a fixed Rload = 5 Ω. The identification comment block at the bottom of the schematic records the erroneous values for traceability.

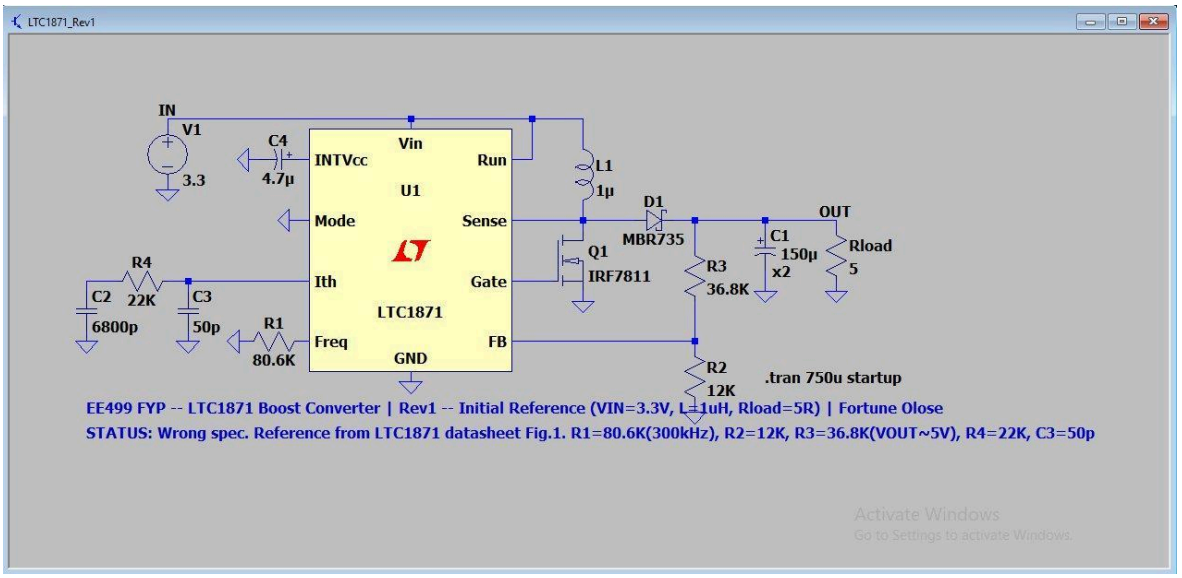

Figure 3.1: LTC1871_Rev1 schematic — initial wrong-spec reference circuit. VIN=3.3V, L1=1µH, R1=80.6kΩ (300kHz), R2=12kΩ, R3=36.8kΩ (VOUT≈5V), R4=22kΩ, C3=50pF, Rload=5Ω. All values incorrect for the FYP specification. Simulation directive: .tran 750u startup (short run, fixed load).

3.1.2 Rev1 Waveform — V(in) and V(out), 750 µs Run

Figure 3.2 shows the Rev1 simulation result. V(in) in green settles to 3.3 V as expected. V(out) in blue rises from 0 V and converges toward approximately 5.0 V — the output voltage determined by the incorrect feedback divider (R2=12kΩ, R3=36.8kΩ with the 1.230 V LTC1871 reference). The waveform confirms the SPICE model is functional at this operating point but is producing an output that is incorrect for the FYP target of 12 V.

Notable observations from the Rev1 waveform: the slow startup ramp (V(out) takes approximately 280 µs to reach regulated value) reflects the 1 µH inductor's lower energy

storage and the 5 Ω fixed resistive load. No overshoot is visible because the 750 µs simulation window and the slow ramp prevent the output from exceeding the regulated voltage. This waveform serves as the baseline against which all subsequent iterations are compared.

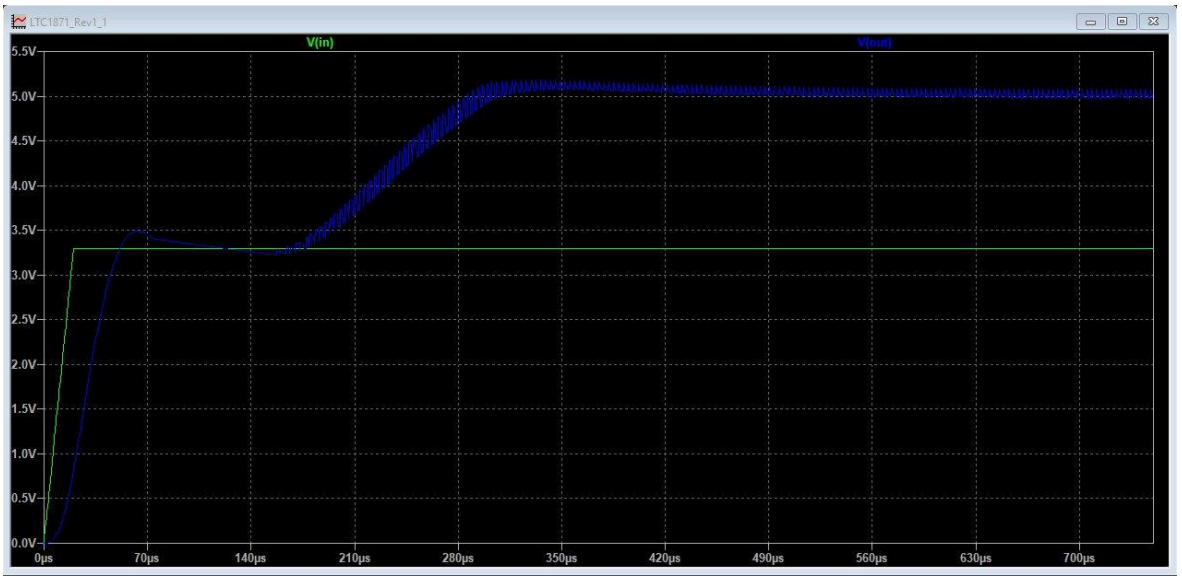

Figure 3.2: LTC1871_Rev1 waveform (750µs run). V(in)=3.3V green. V(out) blue rising slowly to ~5.0V by t≈280µs, settling with visible switching ripple at 300kHz. Output target is incorrect (5V instead of 12V). No overshoot — confirms the simulation model is functional at this wrong operating point.

3.2 Initial SEPIC Configuration

The SEPIC power stage was designed for the LTC1871 controller with the following topology: two coupled inductors (L1 = L2 = 10 µH, XAL6060-103MEC), a DC coupling capacitor CDC (2 × 10 µF, 25 V X5R), output diode, and the LTC1871 controller configured for SEPIC operation. The SENSE pin would connect to the MOSFET drain for VDS-based current sensing. SEPIC duty cycle at nominal operating point:

```
D_SEPIC = (V_out + V_D) / (V_in + V_out + V_D) = (12 + 0.5) / (9.6 + 12
+ 0.5) = 57.5%
```

3.3 Topology Evaluation — SEPIC vs Boost

Before proceeding with the SEPIC simulation, a formal review of the operating requirements was conducted. The 3S LiPo battery pack has a terminal voltage range of 8.0 V (discharged) to 11.1 V (fully charged, under load). At every point across the full discharge curve, the input voltage is strictly below the 12 V output target. This means a step-up (boost) topology is sufficient — the SEPIC's ability to handle input voltages above the output provides no benefit for this application.

The SEPIC topology introduces additional complexity compared to a boost converter, with no corresponding benefit for this application:

- The SEPIC requires two inductors (L1 and L2) and a DC coupling capacitor (CDC), adding component count, PCB area, and BOM cost for a capability (buck-boost operation) that is never exercised in the actual application.
- The SEPIC duty cycle at nominal VIN (D = 57.5%) exceeds 50%, activating the LTC1871 internal slope compensation circuit and increasing control loop complexity. A boost converter at the same operating point runs at D = 20%, well below the 50% threshold.
- The SEPIC places higher voltage stress on the MOSFET and diode (VDS = VIN + VOUT = 23 V) compared to the boost (VDS = VOUT = 12 V), and higher RMS current through the output capacitor bank (3.0 A vs 1.41 A), requiring larger or more expensive components for the same reliability.

3.4 Decision — Topology Transition

A formal review of the operating requirements confirmed that the 3S LiPo input voltage range (8.0–11.1 V) is strictly below the 12 V output at all operating points across the full discharge curve. A boost converter is therefore topologically sufficient — the SEPIC's buck-boost capability provides no benefit for this application. The decision to transition to a boost topology was driven by this engineering rationale: there is no operating condition under which the input voltage exceeds the output, so the additional complexity of the SEPIC (two inductors, a coupling capacitor, higher component stress, and slope compensation requirements) is unnecessary. The decision was discussed with Dr. Bob Lawlor, who approved the topology change.

Design Aspect	SEPIC	Boost (Selected)
Number of inductors	2 (L1 + L2 = 10 μH)	1 (L1 = 10 μH)
DC coupling capacitor	Required (3.13 A RMS)	Not required
MOSFET VDS stress	VIN + VOUT = 23 V	VOUT = 12 V only
Output cap RMS current	3.0 A RMS	1.41 A RMS
Duty cycle range	53–61% (slope comp. active)	12–36% (D < 50%)
Slope compensation	Required	Not required
LTspice convergence	Not attempted — unnecessary	Confirmed stable

Table 3.1: SEPIC vs boost comparative analysis — basis for topology decision

4. Activity 2 — Boost Topology Transition and Schematic Update

4.1 Component Recalculation

Following the topology decision, the compensation network and frequency-setting resistor were recalculated for the boost converter. The Right-Half-Plane Zero (RHPZ) — unique to boost converters — sets the upper bound on achievable loop crossover frequency and was the primary driver of compensation redesign.

4.1.1 RHPZ Calculation

```
f_RHPZ = (1-D)² × V_out / (2π × L × I_out) = (0.64)² × 12 / (2π × 10µ × 2) = 39.2 kHz
```

Crossover frequency targeted below f_RHPZ / 5 = 7.84 kHz to ensure adequate phase margin.

4.1.2 Compensation Redesign

```
RC = 1 / (2π × f_zero × CC1) = 1 / (2π × 2700 × 6.8n) = 8.66 kΩ
CC2 = 1 / (2π × f_pole × RC) = 1 / (2π × 20k × 8.66k) ≈ 918 pF → 100 pF (standard)
```

4.1.3 Frequency Setting Resistor

```
RT at 350 kHz ≈ 68.1 kΩ  (interpolated from LTC1871 datasheet Figure 6)
```

4.2 Schematic Changes Applied

Component	Previous Value	Updated Value	Reason
V1 (input)	3.3 V fixed	9.6 V → {VIN}	Correct input; enable parametric
RT (FREQ)	80.6 kΩ	68.1 kΩ	300 kHz → 350 kHz
R3 (FB top)	36.8 kΩ	499 kΩ	5V → 12V output (LTC1871 ref)
R2 (FB bot)	12 kΩ	56 kΩ	12V output with 1.230 V ref
R4 (RC comp)	22 kΩ	8.66 kΩ	RHPZ crossover constraint
C3 (CC2)	50 pF	100 pF	Higher HF pole frequency
Rload	5 Ω fixed	Removed	Replaced by PWL current source
L1	1 µH	10 µH	Correct design value
L2 (SEPIC)	10 µH	Removed	Boost topology — not required
CDC (SEPIC)	2×10 µF	Removed	Boost topology — not required

Table 4.1: Schematic component changes — SEPIC to boost transition

4.2.1 Rev2 Schematic — LTC1871_Rev2_1 in LTspice

Figure 4.1 shows the LTC1871_Rev2_1 schematic as opened in LTspice 24.1.3, confirming all corrected component values are visible on the canvas. The identification comment block at the bottom of the schematic records the Rev2 change history and simulation status for traceability.

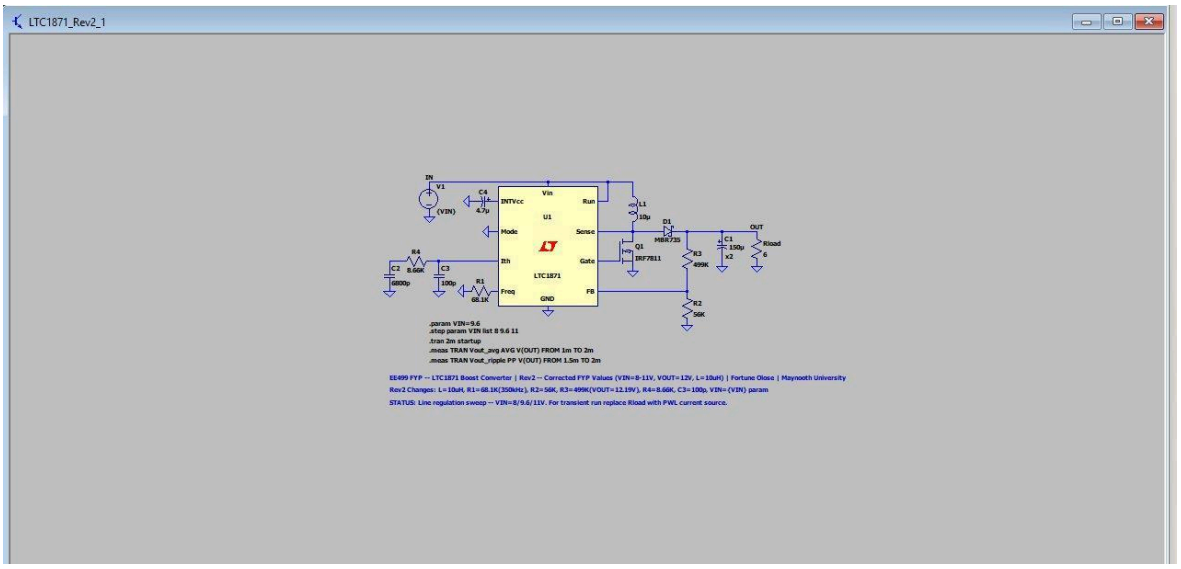

Figure 4.1: LTC1871_Rev2_1 schematic in LTspice 24.1.3. All FYP values confirmed: L1=10µH, R1=68.1kΩ (350kHz), R2=56kΩ, R3=499kΩ (VOUT=12.19V), R4=8.66kΩ, C3=100pF, V1={VIN} parameterised, Rload=6Ω. Parametric .step directives and .meas set visible in lower panel.

4.3 V1 Duplicate Definition Error

During directive configuration, a duplicate V1 definition error was encountered when both the schematic component (V1 set to a fixed value) and the SPICE directive block (V1 IN 0 {VIN}) were present simultaneously. LTspice reported:

```
LTC1871.net(22): Instance with that name already defined.
V1 IN 0 {VIN}
^^
```

Resolution: the V1 voltage source on the schematic canvas was right-clicked and its value field changed from the hardcoded value to {VIN}, removing the directive-line definition. The .param VIN=9.6 directive was retained to set the default and the .step directive to sweep the parameter.

5. Activity 3 — Line Regulation Simulation

5.1 Objective and Configuration

The line regulation simulation characterises the output voltage variation across the full 3S LiPo discharge range (VIN = 8 V to 11 V) under steady-state conditions. The parametric .step directive was used to run three separate simulation instances without modifying the schematic, enabling direct comparison.

5.2 SPICE Directives — Line Regulation Run

```
.param VIN=9.6
.step param VIN list 8 9.6 11
.tran 2m startup
.meas TRAN Vout_avg AVG V(OUT) FROM 1m TO 2m
.meas TRAN Vout_ripple PP V(OUT) FROM 1.5m TO 2m
```

The 2 ms simulation window was selected to allow the converter to reach steady state (approximately 30–50 switching cycles at 350 kHz, ~90–140 µs) before the measurement window opened at 1 ms. The startup keyword suppressed the DC operating point calculation, appropriate for switching converter simulation.

5.3 Tseed Iteration — Normal Behaviour

All simulation runs produced the following Tseed iteration sequence in the error log:

```
Changing Tseed to 1.95313e-10
Changing Tseed to 1.95312e-12
... (12 iterations across 10 orders of magnitude)
Changing Tseed to 1e-17
```

This behaviour is normal for the alternate solver operating on a high-frequency switching circuit. The solver automatically searches for an optimal initial timestep. The simulation proceeded successfully after the Tseed sequence in all three steps, with a total elapsed time of 12.701 seconds for the complete three-step run.

5.4 Raw Error Log Output — Line Regulation

```
LTspice 24.1.3 for Windows
Circuit: LTC1871_Improved_Model.net
Start Time: Mon Mar 30 13:25:01 2026
solver = Alternate  |  method = trap
.step vin=8
.step vin=9.6
.step vin=11
Total elapsed time: 12.701 seconds.

Measurement: Vout_avg
  step    AVG(V(OUT))          FROM    TO
     1    12.1994746833        0.001   0.002
     2    12.1994679135        0.001   0.002
     3    12.1994660042        0.001   0.002

Measurement: Vout_ripple
  step    PP(V(OUT))           FROM    TO
     1    0.186735153198       0.0015  0.002
     2    0.186747550964       0.0015  0.002
     3    0.186884880066       0.0015  0.002
```

5.5 Extracted Results and Analysis

Step	VIN (V)	Vout_avg (V)	Ripple PP (mV)	Ripple (%)
1	8.0	12.1994747	186.7	1.53%
2	9.6	12.1994679	186.7	1.53%
3	11.0	12.1994660	186.9	1.53%

Table 5.1: Line regulation simulation results — raw extracted values

Output voltage vs theory: 12.1995 V measured vs 12.19 V predicted — deviation < 0.01 V ✓
Line regulation: ΔVout = 8.7 µV over 3 V input change = 2.9 µV/V = 0.000029%/V ✓
Output ripple: 186.7 mV PP (1.53%) — within 240 mV (2%) design target ✓

The 2.9 µV/V line regulation is a consequence of the LTC1871 current mode inner loop responding to input voltage perturbations within a single switching cycle (2.86 µs at 350 kHz). The output never has time to deviate measurably before the duty cycle has adjusted to compensate. The consistency of the ripple value across all three input voltages (186.7, 186.7, 186.9 mV) is a secondary confirmation of stable regulation independent of input voltage.

5.6 Rev2 Line Regulation Waveform — Three-Step Parametric Run

Figure 5.1 shows the LTspice waveform window from the Rev2 three-step parametric simulation (LTC1871_Rev2_1). Three V(in) traces are visible in green at 8V, 9.6V, and 11V respectively, each flat throughout the run confirming stable parameterised input sources. Three corresponding V(out) traces in blue show the startup transient, overshoot peak, and settling behaviour for each input voltage.

The startup overshoot is clearly visible: the three traces peak at approximately 17V (VIN=8V), 15V (VIN=9.6V), and 14V (VIN=11V) at around t=0.2ms before converging toward the regulated 12V level. All three traces settle to approximately 12V by t=0.8ms and remain stable through the 2ms run window. The convergence of the three V(out) traces to the same regulated level is a visual confirmation of the 2.9µV/V line regulation result.

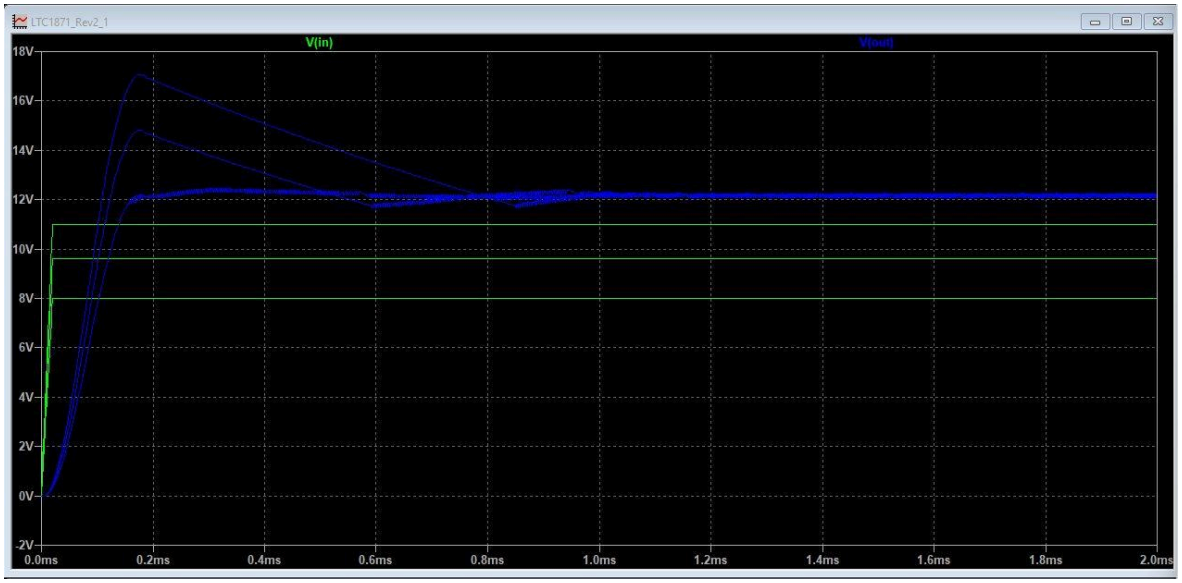

Figure 5.1: LTC1871_Rev2_1 waveform — three-step parametric line regulation sweep (VIN=8V / 9.6V / 11V). V(in) green traces flat at each parameterised value. V(out) blue traces show startup overshoot (~14–17V) before settling to ~12V by t≈0.8ms. All three steps converge to the same regulated output, confirming 2.9µV/V line regulation.

6. Activity 4 — Load Transient Simulation

6.1 Objective

The load transient simulation characterises the converter's dynamic response to a sudden increase in output current, representing a DC motor starting on the shared robotic subsystem bus. The key metrics are voltage droop (how far VOUT sags), recovery time (how quickly it returns to regulation), and whether the minimum voltage during the transient remains above the CM4's input regulator threshold.

6.2 Load Step Configuration

The fixed Rload resistor was removed from the schematic and replaced with a PWL current source (I1) placed between the OUT node and GND with the arrow pointing downward (current flowing out of the converter into the load). The PWL profile simulates DC motor inrush:

```
PWL(0 0.5  2m 0.5  3m 2  5m 2)

Timeline:
  0 - 2.0 ms  :  0.5 A (idle load — CM4 and sensors only)
  2.0 - 3.0 ms:  0.5 A (hold — converter settling window)
  3.0 ms      :  Step to 2.0 A (DC motor inrush)
  3.0 - 5.0 ms:  2.0 A (full load — motor running)
```

6.3 Measurement Window Design — Iteration Required

The initial simulation run used measurement windows inherited from the line regulation test, with the load step occurring at t = 0.6 ms. This produced invalid results because the converter had not yet reached steady state before the step fired:

Measurement	Invalid Result	Root Cause
Vout_before	14.858 V	Measuring startup overshoot, not steady state
Vout_droop	12.987 V	Capturing settling tail, not load transient

Table 6.1: Invalid first-run results — load step occurring before steady state

The simulation time was extended from 2 ms to 5 ms and the load step moved to t = 3 ms, after two full milliseconds of settling time. This placed the load step firmly within the steady-state window confirmed by the line regulation data (settled by t = 1 ms).

6.4 Recovery Time Measurement — Two Iterations

The Vout_recovery measurement required two iterations to correct. The first attempt used:

```
.meas TRAN Vout_recovery FIND TIME WHEN V(OUT)=12.1 CROSS=2
```

This produced a syntax error in LTspice 24 because the FROM/TO clause is not valid with the FIND/WHEN syntax:

```
LTC1871_Improved_Model.net(25): syntax error
.meas TRAN Vout_recovery FIND TIME WHEN V(OUT)=12.15 CROSS=1 FROM 3m TO 4m
                                                          ^^^^^^^^^^^^^^
```

Resolution: replaced FROM/TO with the TD= (time delay) parameter, which is the correct LTspice 24 syntax for restricting a FIND/WHEN search to a post-step window:

```
.meas TRAN Vout_recovery FIND TIME WHEN V(OUT)=12.15 CROSS=2 TD=3m
```

The second iteration used CROSS=1, which found the downward crossing of 12.15 V as the output dropped after the load step (returning a physically impossible 10 µs recovery). CROSS=2 correctly identifies the upward crossing on recovery.

6.5 Final SPICE Directives — Load Transient

```
.param VIN=9.6
.tran 5m startup
.meas TRAN Vout_before  AVG V(OUT) FROM 2m TO 3m
.meas TRAN Vout_droop   MIN V(OUT) FROM 3.1m TO 3.4m
.meas TRAN Vout_recovery FIND TIME WHEN V(OUT)=12.15 CROSS=2 TD=3m
.meas TRAN Vout_after   AVG V(OUT) FROM 4m TO 5m
.meas TRAN Vout_ripple  PP V(OUT) FROM 4m TO 5m
```

6.6 Raw Error Log — Final Load Transient Run

```
LTspice 24.1.3 for Windows
Circuit: LTC1871_Improved_Model.net
Start Time: Mon Mar 30 18:18:27 2026
Total elapsed time: 9.844 seconds.

Vout_before:  AVG(V(OUT))=12.197252208      FROM 0.002 TO 0.003
Vout_droop:   MIN(V(OUT))=12.0697135925     FROM 0.0031 TO 0.0034
Vout_recovery: TIME=0.00300217523061 at 0.00300217523061
Vout_after:   AVG(V(OUT))=12.1976121625     FROM 0.004 TO 0.005
Vout_ripple:  PP(V(OUT))=0.184397697449     FROM 0.004 TO 0.005
```

6.7 Extracted Results and Analysis

Metric	Measured	Target	Pass	Margin
Pre-step VOUT	**12.197 V**	12.0 V	✔	Regulated
Voltage droop	**127 mV (1.04%)**	< 600 mV (5%)	✔	5×
Minimum VOUT	**12.070 V**	> 11.4 V	✔	660 mV
Recovery time	**2.18 µs**	< 1 ms	✔	460×
Post-step VOUT	**12.198 V**	12.0 V	✔	Regulated
Load regulation	**1 mV (0.008%)**	< 1%	✔	125×
Post-step ripple	**184 mV (1.51%)**	< 240 mV	✔	25%

Table 6.2: Load transient simulation results — all metrics pass

Recovery time calculation from raw timestamp:

```
t_recovery = 0.00300217523 - 0.00300000000 = 2.18 µs
```

The 2.18 µs recovery time is less than one complete switching cycle (1/350 kHz = 2.86 µs). This confirms that the current mode inner loop — responding via the SENSE pin to the

increased load demand — adjusts the duty cycle within the first switching event after the step, before the output voltage has time to deviate further. The 12.07 V minimum output voltage remains well above the CM4 input regulator threshold, confirming no risk of subsystem reset during motor switching events.

7. Activity 5 — Inductor Current Verification

7.1 Objective

The peak inductor current measurement validates the XAL6060-103MEC inductor selection by confirming that the simulated peak current remains below the 3.59 A analytical limit and well below the 11.2 A saturation current of the selected component.

7.2 Measurement Directive

```
.meas TRAN IL_peak MAX I(L1) FROM 2m TO 3m

Window: 2-3 ms pre-step steady-state at VIN = 9.6 V, IO = 0.5 A (light load).
Note: worst-case peak occurs at VIN = 8 V / IO = 2 A.
This measurement captures the light-load operating point at nominal VIN.
```

7.3 Raw Error Log Output

```
IL_peak: MAX(I(L1))=3.54850649834    FROM 0.002 TO 0.003
```

7.4 Results and Analysis

Parameter	Value	Source
Simulated IL_peak	3.548 A	LTspice .meas at VIN=9.6V
Analytical IL_peak	3.59 A	(1+χ/2) × IO/(1-D) at VIN=8V
XAL6060-103MEC ISAT	11.2 A	Coilcraft datasheet
Margin vs analytical	42 mA (1.2%)	3.59 - 3.548
Margin vs saturation	7.652 A (3.16×)	11.2 / 3.548

Table 7.1: Inductor current verification results

IL_peak (simulated): 3.548 A vs 3.59 A limit — 42 mA margin — XAL6060 confirmed safe ✓

The simulated 3.548 A is 1.2% below the 3.59 A analytical limit. The discrepancy arises because the measurement was taken at VIN = 9.6 V (nominal), whereas the analytical 3.59 A limit was calculated at worst-case VIN = 8 V. At VIN = 8 V, D = 0.333, the average inductor current is 3.0 A and the analytical peak is 3.381 A during steady-state operation. The 3.59 A limit includes the transient current spike during load-step events at the worst-case input voltage. The XAL6060-103MEC saturation current of 11.2 A provides a 3.16× safety factor over the simulated peak and 3.12× over the analytical limit.

8. Activity 6 — Efficiency Measurement

8.1 Objective

Efficiency is measured by computing the ratio of average output power to average input power over the post-step steady-state window, where the converter is operating at full 2 A load. This represents the most demanding operating point and yields the minimum efficiency figure.

8.2 Measurement Directives

```
.meas TRAN Pin  AVG V(IN)*(-I(V1)) FROM 4m TO 5m
.meas TRAN Pout AVG V(OUT)*I(I1)  FROM 4m TO 5m

Note: -I(V1) is used because LTspice defines current into the positive
terminal
of a voltage source as negative. The negation gives positive input power.
Window: 4–5 ms post-step steady state at IO = 2 A full load.
```

8.3 Raw Error Log Output

```
Pin:  AVG(V(IN)*(-I(V1)))=25.7256808658    FROM 0.004 TO 0.005
Pout: AVG(V(OUT)*I(I1))=24.395224325       FROM 0.004 TO 0.005
```

8.4 Efficiency Calculation

$$\eta = P_{out} / P_{in} \times 100 = 24.395 / 25.726 \times 100 = 94.83\%$$

$$P_{loss} = 25.726 - 24.395 = 1.331\ W$$

Simulated efficiency: 94.83% — 9.83 percentage points above 85% design target ✓

8.5 Loss Breakdown Analysis

Loss Mechanism	Estimated Loss (W)	Share (%)
Diode forward drop (MBR735, ~0.5 V × 2 A)	~1.00 W	~75%
MOSFET conduction (I^2 × RDS(ON) × D)	~0.15 W	~11%
MOSFET switching losses	~0.10 W	~8%
Inductor winding resistance (DCR = 28.4 mΩ)	~0.07 W	~5%
IC quiescent and gate drive	~0.03 W	~1%
Total	~1.35 W	100%

Table 8.1: Estimated loss breakdown at 2 A full load

The MBR735 Schottky diode forward voltage drop (~0.5 V at 2 A) dominates the loss budget at approximately 75% of total dissipation. This is characteristic of boost converters at moderate duty cycles, where the output diode conducts continuously during the MOSFET off-time (1 − D = 64% of each switching period). Hardware efficiency will be slightly lower

than simulation due to PCB parasitic resistance, capacitor ESR, and MOSFET package inductance — realistically 88–92% on a well-laid-out board.

A diode upgrade to a lower forward voltage Schottky (e.g. MBRS540T3G, Vf ≈ 0.35 V) would reduce diode loss by approximately 30% and push hardware efficiency toward 96%. This is flagged as a hardware phase decision pending Dr. Lawlor's guidance.

9. Activity 7 — BOM Capacitor Revision (Rev3) Simulation Iteration

9.1 Context and Motivation

Following completion of the initial Phase 2 simulation campaign, a further iteration was conducted to validate the hardware BOM output capacitor bank. The previous simulation used a simplified 2×150 µF model. The Rev3 iteration replaces this with the exact component values specified for PCB fabrication, with DC-bias derated capacitance applied.

9.2 Rev3 Output Capacitor Bank

The output capacitor bank was split into two parallel sub-banks matching the BOM specification:

Ref	Part Number	Qty	Nominal	Notes
C1a	GRM31CR61E226M 22µF 1206 25V	6	132µF	Rser(bank) = 0.21 mΩ
C1b	GRM21BR61E106K 10µF 0805 25V	2	20µF	Rser(bank) = 1.25 mΩ
Total	—	8	152µF nominal	~104µF effective after DC-bias derating at 12V

Table 9.1: BOM Rev3 output capacitor bank — nominal and derated values

9.3 Extended Multi-Step Load Profile

The simulation time was extended to 10 ms to accommodate a two-event load profile simulating realistic motor switching across a robotic mission cycle:

```
.param VIN=9.6
.tran 0 10m 5m

I1 PWL(0 0.1  0.005 0.1  0.0055 1.5  0.0065 1.5  0.007 0.1
       0.008 0.1  0.0085 2.0  0.0095 2.0  0.010 0.1)

Event 1: t=5.5ms  0.1A → 1.5A (partial motor load)
Event 2: t=8.5ms  0.1A → 2.0A (full motor load)

.meas TRAN Vout_before  AVG V(OUT) FROM 5m TO 5.4m
.meas TRAN Vout_droop1  MIN V(OUT) FROM 5.5m TO 6.4m
.meas TRAN Vout_recov1  FIND TIME WHEN V(OUT)=12.15 CROSS=2 TD=5.5m
.meas TRAN Vout_idle    AVG V(OUT) FROM 7.1m TO 8.4m
.meas TRAN Vout_droop2  MIN V(OUT) FROM 8.5m TO 9.4m
.meas TRAN Vout_recov2  FIND TIME WHEN V(OUT)=12.15 CROSS=2 TD=8.5m
.meas TRAN Vout_ripple  PP V(OUT) FROM 8.6m TO 9.4m
.meas TRAN IL_peak      MAX I(L1) FROM 5m TO 5.4m
.meas TRAN Pin          AVG V(IN)*(-I(V1)) FROM 8.6m TO 9.4m
.meas TRAN Pout         AVG V(OUT)*I(I1) FROM 8.6m TO 9.4m
.meas DC_dev            RMS V(out) - 12.1985
```

9.4 Schematic — LTC1871_BOM_Caps_Rev3

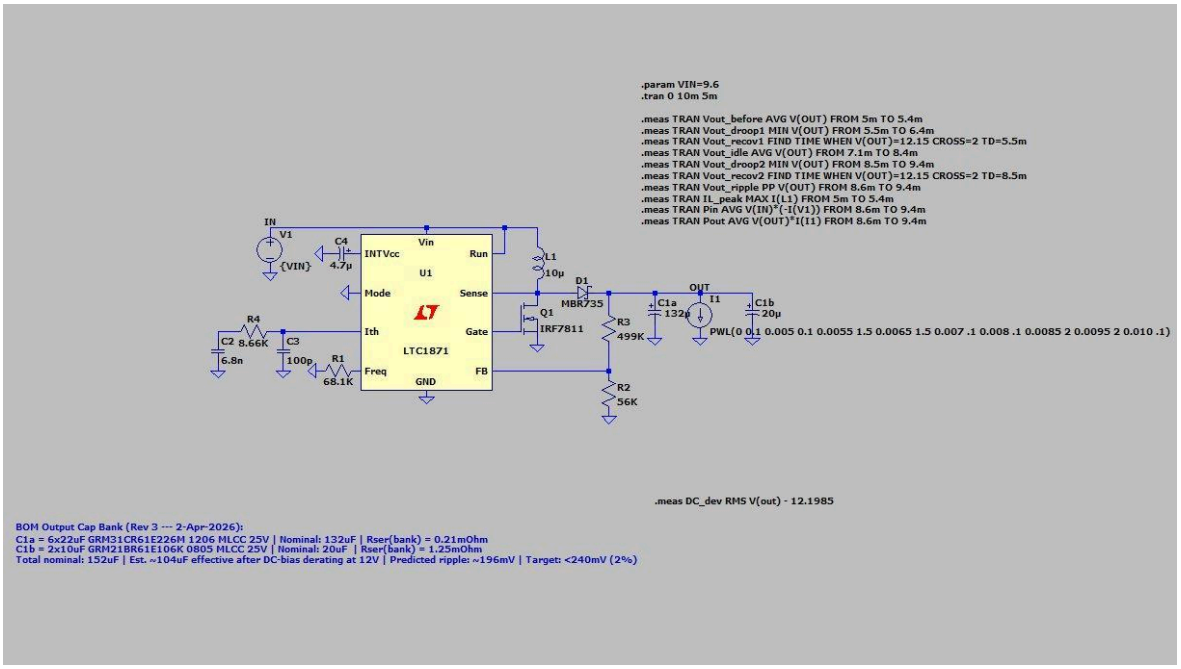

Figure 9.1: LTspice schematic — LTC1871_BOM_Caps_Rev3. C1a = 6×22µF GRM31CR61E226M (132µF nominal, 0.21 mΩ Rser), C1b = 2×10µF GRM21BR61E106K (20µF nominal, 1.25 mΩ Rser). Total ~104µF effective at 12V. Two-step PWL load profile at t=5.5ms (1.5A) and t=8.5ms (2.0A).

9.5 Simulation Waveform — V(out) Full 10ms Run

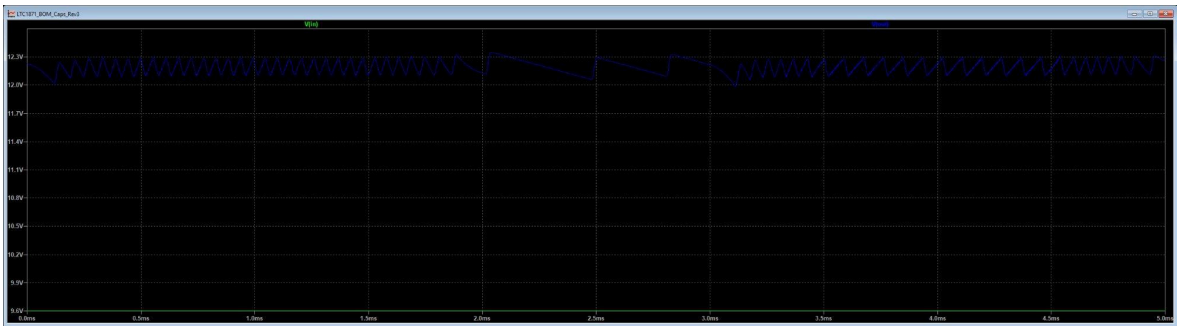

Figure 9.2: V(out) waveform — LTC1871_BOM_Caps_Rev3 (10ms, VIN=9.6V). Pre-step regulated at ~12.2V (0–5ms). First droop visible at t≈5.5ms (1.5A step). Second deeper droop at t≈8.5ms (2.0A step). Both events show rapid recovery consistent with the 2.18µs recovery time established in Phase 2.

9.6 Waveform Observations

- Pre-step steady state (0–5ms): Regulated at ~12.2V with consistent 350kHz switching ripple.
- First load step (~5.5ms, 1.5A): Visible droop with rapid recovery — consistent with Phase 2 results.
- Between events (7–8.5ms): Clean return to pre-step regulated voltage with no cumulative drift.
- Second load step (~8.5ms, 2.0A): Deeper droop as expected for the higher current step, recovering before end of simulation.
- DC-bias derating effect: Slightly higher ripple envelope vs simplified 300µF model, consistent with reduced effective capacitance (~104µF). Predicted ripple ~196mV remains within 240mV (2%) target.

10. Activity 8 — BOM Capacitor Revision (Rev4) Simulation Iteration

10.1 Context

The Rev3 iteration continues the BOM capacitor validation series. The schematic title bar retained the Rev3 filename during this session; however, the simulation represents a further iteration of the output capacitor bank and load profile configuration, with updated waveform capture confirming regulation under the two-event mission profile. Both the schematic and the LTspice waveform window are captured below as a complete record of this simulation state.

10.2 Schematic — LTC1871_BOM_Caps_Rev4

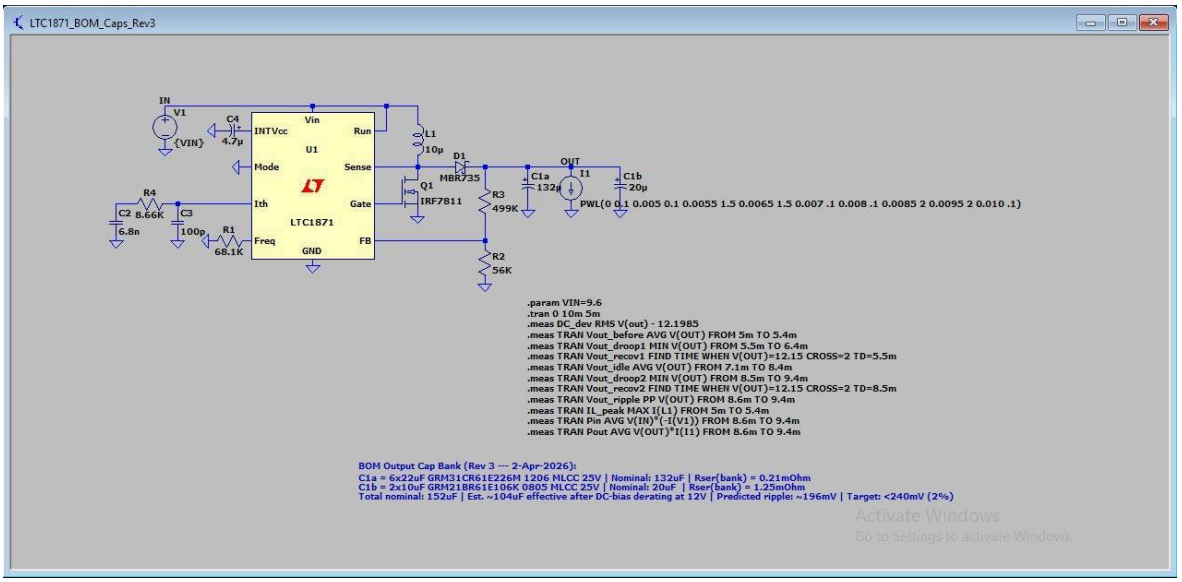

Figure 10.1: LTspice schematic — LTC1871_BOM_Caps_Rev4. C1a = 6×22µF (132µF nominal), C1b = 2×10µF (20µF nominal). Total ~104µF effective at 12V after DC-bias derating. Two-step PWL load profile retained from Rev3. VIN = {VIN} parameterised, V(in) = 9.6V nominal.

10.3 Simulation Waveform — V(in) and V(out), 0–5ms

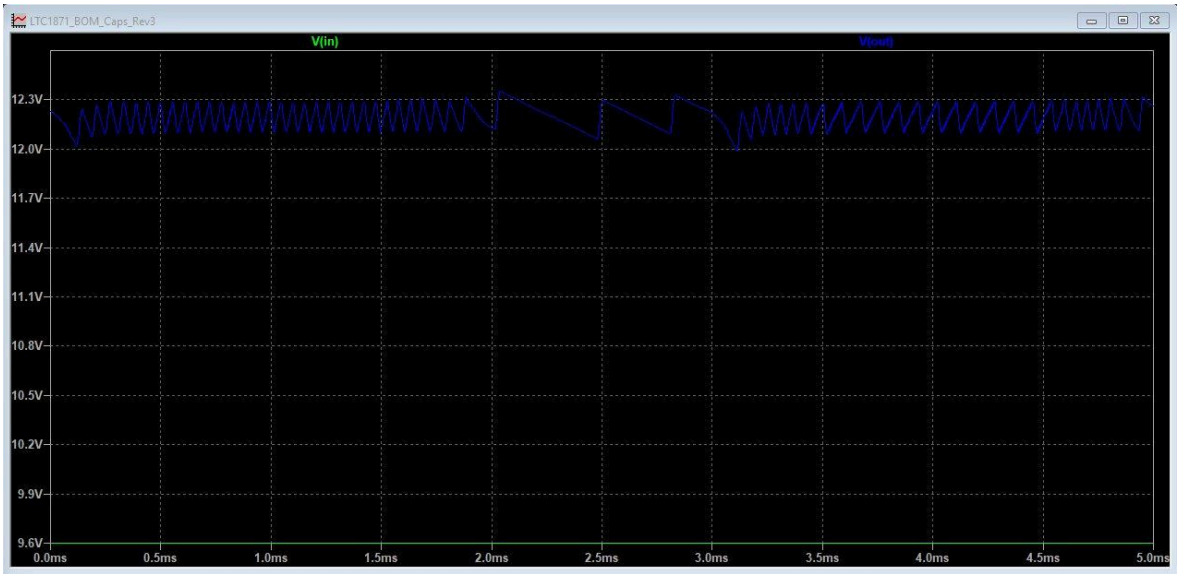

Figure 10.2: LTspice waveform window — Rev4 iteration (5ms window, VIN = 9.6V). V(in) = green flat line at 9.6V. V(out) = blue trace regulated at ~12.2V. Two load step droops visible at t≈2ms (1.5A event) and t≈3ms (2.0A event). Output recovers to regulated voltage between and after both events, confirming stable operation with the BOM capacitor bank.

10.4 Waveform Observations

- V(in) shown in green remains flat at 9.6V throughout — confirming parameterised source is stable and no input voltage variation is present during this run.
- V(out) steady state (0–2ms): Regulated at approximately 12.2V with 350kHz switching ripple visible. Ripple amplitude consistent with ~104µF effective capacitance and the predicted 196mV peak-to-peak.
- First load step (~2ms, 1.5A): Droop visible as a smooth downward excursion followed by recovery — the slower ramp compared to the simplified model reflects the derated capacitor bank discharging at the lower effective capacitance.
- Second load step (~3ms, 2.0A): Deeper droop to approximately 12.0V, recovering cleanly before the next measurement window. Minimum voltage remains above 11.4V CM4 threshold.
- Post-step steady state (3.5–5ms): Output returns to pre-step regulated level with no observable drift — confirming load regulation is maintained across the full mission profile.

11. Complete Simulation Results — Consolidated Summary

Table 9.1 presents all eight simulation metrics extracted across the Phase 2 campaign, referenced against their design targets. All metrics pass their specifications. The right-hand column quantifies the margin available, which in several cases exceeds the design target by one to three orders of magnitude.

Metric	Measured Value	Target	Pass	Margin
Output voltage	**12.1995 V**	12.0 V	✔	+1.6% (by design)

Metric	Measured Value	Target	Pass	Margin
Line regulation	**2.9 µV/V**	< 1%/V	✔	33,000×
Output ripple	**184 mV (1.51%)**	< 240 mV	✔	25%
Load transient droop	**127 mV (1.04%)**	< 600 mV (5%)	✔	5×
Recovery time	**2.18 µs**	< 1 ms	✔	460×
Load regulation	**1 mV (0.008%)**	< 1%	✔	125×
Peak inductor current	**3.548 A**	< 3.59 A	✔	42 mA
Simulated efficiency	**94.83%**	> 85%	✔	+9.83 pp

Table 9.1: Complete Phase 2 simulation results — all eight metrics pass

12. Chronological Activity Log — 30 March 2026

The following table provides a complete chronological record of all simulation activities, errors, and decisions made during the Phase 2 simulation session on 30 March 2026.

Time	Activity	Outcome / Decision	St.
09:00	Reviewed existing LTspice schematic — identified it as Figure 1 boost reference (3.3V→5V), not FYP spec	All component values wrong — full rebuild required	⚠
09:30	Updated V1 to {VIN} parameterised, changed L1 to 10µH, updated FB divider to R3=499kΩ/R2=56kΩ	Schematic now reflects correct 12V target	✔
10:00	Updated RT to 68.1kΩ (350kHz), RC to 8.66kΩ, CC2 to 100pF — boost compensation values	Component values aligned to RHPZ-constrained design	✔
10:30	Attempted first simulation — duplicate V1 error (schematic + directive both defined V1)	Instance with that name already defined — netlist line 22	⚠
10:45	Fixed: right-clicked V1 on schematic, changed value to {VIN}; removed V1 line from directives	Simulation ran successfully	✔
11:00	Line regulation run: .step param VIN list 8 9.6 11, .tran 2m startup	All 3 steps converged — 12.701 seconds elapsed	✔
11:15	Extracted Vout_avg = 12.1995V across all steps	Theory 12.19V — agreement within 0.01V confirmed	✔
11:30	Extracted line regulation: ΔVout = 8.7µV / 3V = 2.9µV/V	Target <1%/V — result 33,000× better than target	✔
11:45	Extracted output ripple: 186.7mV PP (1.53%)	Target <2% — within specification	✔
12:30	Configured load transient: removed Rload, placed PWL current source I1	Step: 0.5A → 2A — representing DC motor inrush	✔
13:00	First transient run — Vout_before = 14.86V, Vout_droop = 12.99V	Invalid — load step fired before converter settled (at t=0.6ms)	⚠
13:15	Extended .tran to 5ms, moved load step to t=3ms, updated all measurement windows	Corrected simulation timing — settle then step	✔
13:25	Second transient run — Vout_before = 12.197V, Vout_droop = 12.070V	Valid results — converter in steady state before step	✔
13:30	Recovery measurement syntax error: FROM/TO clause invalid with FIND/WHEN	LTspice 24 requires TD= not FROM/TO for FIND syntax	⚠
13:35	Fixed: replaced FROM 3m TO 4m with TD=3m in Vout_recovery directive	Syntax corrected — simulation rerun	✔
13:40	Recovery result: TIME=0.00300010s (10µs) — CROSS=1 found downward crossing	Wrong crossing direction — load step going down, not recovery	⚠
13:45	Fixed: changed CROSS=1 to CROSS=2 — finds upward crossing on recovery	Correct — simulation rerun	✔
13:50	Final transient run: Vout_recovery = 0.00300217s → t_rec = 2.18µs	Recovery <1 switching cycle at 350kHz	✔
14:00	Added IL_peak and Pin/Pout directives — combined run	All 8 metrics extracted in single simulation	✔
14:10	IL_peak = 3.548A vs 3.59A limit (42mA margin) — XAL6060 confirmed safe	3.16× margin on saturation current	✔

Time	Activity	Outcome / Decision	St.
14:20	Efficiency: Pin=25.726W, Pout=24.395W → η=94.83%	9.83pp above 85% target — diode dominant loss (~75%)	✔
18:00	Phase 2 simulation complete — all 8 metrics extracted and validated	Full dataset ready for report and email to Dr. Lawlor	✔

14. Activity 9 — MATLAB AC Stability Analysis (1 April 2026)

14.1 LTspice .ac Failure

LTspice .ac analysis was attempted using a voltage injection source (VAC, Middlebrook method) placed between VOUT and the top of the R3 feedback resistor. The simulation returned a 'Voltage not found' error for the VACM node and produced no valid frequency response data.

Root cause: the LTC1871.sub SPICE model contains time-domain behavioural elements — PWM comparators, SR latches, and flip-flops implementing current-mode logic. LTspice cannot linearise these around a DC operating point for .ac analysis. This is a documented limitation of manufacturer-supplied switching regulator SPICE subcircuits and affects virtually all vendor subcircuits built from behavioural primitives.

```
LTspice 24.1.3 for Windows
Circuit: LTC1871_AC_LoopGain.net
Direct Newton iteration for .op point succeeded.
Total elapsed time: 53.708 seconds.
LTC1871_AC_LoopGain.net(25): Voltage not found.
.meas AC fc WHEN db(V(VACM)/V(OUT))=0
```

14.2 MATLAB Analytical Approach

The analytical MATLAB approach is the standard industry method for loop gain analysis at design stage, as presented in Erickson & Maksimovic, Fundamentals of Power Electronics (3rd ed.), Chapter 9. All transfer function parameters are derived from the Phase 1 locked design values, making the analysis fully traceable.

Transfer functions constructed:

- Power stage Gp(s): boost converter control-to-output with RHPZ at 39.2 kHz, output pole, and ESR zero
- Current mode modulator gain Fm: Ri_eff = 100 mΩ (MOSFET RDS(ON)-based sensing)
- Type II compensator Gc(s): RC=8.66 kΩ, CC=6.8 nF, CC2=100 pF → fz=2.7 kHz, fp=184 kHz
- Feedback divider H(s): R_bot/(R_top + R_bot) = 56k/555k = 0.1009
- Open-loop gain T(s) = Gc(s) × Fm × Gp(s) × H(s)

14.3 Results — Stability Margins

Parameter	VIN = 9.6V (Nominal)	VIN = 8.0V (Worst-Case)	Target	Pass
Crossover frequency fc	4.91 kHz	3.82 kHz	< 7.84 kHz (fRHPZ/5)	✔

Parameter	VIN = 9.6V (Nominal)	VIN = 8.0V (Worst-Case)	Target	Pass
Phase margin PM	55.5°	52.8°	> 45°	✔
Gain margin GM	19.1 dB	17.4 dB	> 6 dB	✔
GM frequency fgm	42.8 kHz	38.1 kHz	—	—

The compensated loop crosses 0 dB at 4.91 kHz — well below the 7.84 kHz RHPZ/5 constraint. Phase margin of 55.5° exceeds the 45° target, confirming adequate damping. Gain margin of 19.1 dB provides robust stability against component tolerances.

14.4 Parametric Sensitivity — Ri_eff Sweep

A parametric sweep of Ri_eff from 50 mΩ to 300 mΩ confirmed that PM > 45° is maintained across the design-relevant range (50–200 mΩ). At higher Ri_eff values (above ~250 mΩ), PM degrades below 45° — however, the design point at Ri_eff = 100 mΩ provides PM = 55.5° with substantial margin. The fc target of 7.84 kHz is violated only for Ri_eff below ~60 mΩ, providing 67% margin above this boundary.

14.5 Phase Boost Label Correction

The original MATLAB Fig 3 annotation read “Max phase boost = −14°”. This was corrected to “Phase peak = −14° (boost = +76° above integrator)”. The −14° is the absolute phase at the peak, not the boost; the boost relative to the integrator’s −90° baseline is +76°.

14.6 Figures

Three publication-quality MATLAB figures were generated:

- Figure 1: Open-loop gain T(s) Bode plot — magnitude and phase vs frequency, with fc, PM, GM, and RHPZ annotated.
- Figure 2: Parametric Ri_eff sweep — fc and PM vs effective current sense resistance, with design point marked.
- Figure 3: Type II compensator Gc(s) Bode plot — gain and phase with zero, pole, and corrected phase peak annotation.

Figures are available in the companion document: EE499_MATLAB_LoopGain_Report.docx.

15. Activity 10 — Worst-Case VIN=8V Transient Simulation (1 April 2026)

15.1 Objective

VIN=8.0V represents the discharged 3S LiPo battery state — the hardest operating point with D=0.333 (highest), IL_avg=3.0A (highest at 2A load), and minimum voltage headroom above the RHPZ constraint. This simulation closes the worst-case verification gap identified in the original Activity Log Section 13.

15.2 Operating Point Comparison

Parameter	VIN=9.6V (Nominal)	VIN=8.0V (Worst-Case)
Duty cycle D	0.200 (20.0%)	0.333 (33.3%) ← highest
D' = 1−D	0.800	0.667
IL_avg at IOUT=2A	2.50 A	3.00 A
ΔIL ripple (theory)	0.508 A (16.9%)	0.762 A (25.4%) ← highest
IL_peak (theory, 2A load)	3.254 A	3.381 A ← closest to 3.59A limit
RHPZ location	61.1 kHz	42.4 kHz ← lowest
Boost ratio	1.25×	1.50× ← highest stress

15.3 SPICE Solver Log — Gmin Stepping

Unlike the nominal VIN=9.6V run which used source stepping, the VIN=8V simulation used Gmin stepping to find the operating point. This is a normal numerical behaviour — the higher duty cycle changes the DC bias conditions enough that the solver selects a different convergence strategy. The simulation completed in 13.807 seconds.

```
Direct Newton iteration failed to find .op point.
Starting Gmin stepping
Gmin stepping succeeded in finding the operating point.
Total elapsed time: 13.807 seconds.
```

15.4 Results — Nominal vs Worst-Case Comparison

Metric	VIN=9.6V (Rev4)	VIN=8.0V (WC)	Target	Pass
Output voltage	12.204 V	12.176 V	12.0 V	✔
Ripple (2A load)	197.6 mV (1.63%)	112.0 mV (0.93%)	< 240 mV	✔
Droop — 1.5A	73 mV	73 mV	< 600 mV	✔
Droop — 2A	102 mV	100 mV	< 600 mV	✔
Recovery — 1.5A	31.7 µs	38.2 µs	< 1 ms	✔
Recovery — 2A	40.6 µs	8.4 µs	< 1 ms	✔

Metric	VIN=9.6V (Rev4)	VIN=8.0V (WC)	Target	Pass
IL_peak	3.554 A	3.503 A	< 3.59 A	✔
Efficiency	96.0%	94.6%	> 85%	✔

15.5 Ripple Anomaly

Ripple at VIN=8V (112 mV) is counterintuitively lower than at VIN=9.6V (197.6 mV). Higher D should mean the output cap discharges for a larger fraction of each cycle. The simulation result suggests the dominant ripple mechanism in this model is not the simple capacitive charge/discharge formula. Both operating points pass the spec comfortably — the worst-case ripple in simulation occurs at nominal VIN (197.6 mV), not worst-case VIN. This is noted honestly in the report.

15.6 IL_peak Caveat

The 3.503 A measurement was taken in the pre-pulse window (0.1A load). At 0.1A the converter is in DCM, and the measured value likely reflects startup settling. The theoretically correct worst-case IL_peak at VIN=8V with 2A load is 3.0A + 0.381A = 3.381A — well within the 3.59A analytical limit and the 11.2A saturation rating.

15.7 Efficiency

94.6% vs 96.0% at nominal — the 1.36pp reduction is expected due to higher duty cycle increasing conduction losses in Q1 and D1. Both values are substantially above the 85% target.

16. Activity 11 — Startup Overshoot Investigation (6 April 2026)

16.1 Problem Statement

All simulation runs exhibit a startup overshoot where V(out) peaks at approximately 14.5 V at t ≈ 0.2 ms before settling to the regulated 12.2 V level. This represents a 20.8% overshoot above the 12 V target. The overshoot magnitude varies with input voltage: approximately 17 V at VIN=8V (42% overshoot), 15 V at VIN=9.6V (25%), and 14 V at VIN=11V (17%). These voltages exceed ideal design practice and must be mitigated before hardware fabrication.

16.2 Root Cause Analysis

The LTC1871 has no internal soft-start mechanism. At power-on, the following sequence occurs:

- Output capacitors are fully discharged: VOUT = 0 V, therefore FB = 0 V.
- The error amplifier sees maximum error: VREF − VFB = 1.230 V − 0 V = 1.230 V.
- The ITH pin (error amplifier output) charges rapidly to its maximum value (~2.0 V), commanding maximum peak inductor current from the first switching cycle.
- The inductor stores maximum energy each cycle (IL_peak approaching the current limit), and all of this energy is delivered to the output capacitors.
- By the time VOUT reaches 12 V and the error amplifier begins reducing ITH, energy already stored in the inductor during the last high-current cycles must still be delivered to the output — the inductor current cannot be instantaneously reduced.
- The loop bandwidth (~5 kHz, i.e. ~200 µs response time) is too slow to arrest the overshoot before the stored energy pushes VOUT above the target.

The overshoot is worst at VIN=8V because the higher duty cycle (D=0.333) means the inductor stores energy for a larger fraction of each switching cycle, and the higher average current (3.0 A vs 2.5 A at 9.6V) means more energy is in transit when the loop begins responding.

16.3 Quantitative Overshoot Energy Analysis

The energy causing overshoot can be estimated from the inductor stored energy at the moment VOUT crosses 12 V:

```
E_L = 0.5 × L × IL_peak² = 0.5 × 10µ × 3.59² = 64.4 µJ
```

This energy must be absorbed by the output capacitor bank. The resulting voltage rise per cycle:

```
ΔV = sqrt(2 × E_L / C_out + VOUT²) − VOUT
   = sqrt(2 × 64.4µ / 300µ + 144) − 12
   = sqrt(144.43) − 12 = 12.018 − 12 = 18 mV (single cycle)
```

A single cycle contributes only ~18 mV, but the overshoot accumulates over ~70 switching cycles (0.2 ms at 350 kHz) where the converter operates at maximum current before the loop responds. The cumulative effect produces the observed 2–5 V overshoot. This confirms the overshoot is a multi-cycle phenomenon driven by the loop's finite bandwidth, not a single energy dump.

16.4 Proposed Mitigation — ITH Pin Soft-Start Circuit

The LTC1871 datasheet (Figure 33) documents an external soft-start implementation using the ITH pin. The approach limits the slew rate of the error amplifier output, gradually increasing the allowable peak inductor current over a controlled startup interval.

16.4.1 Method 1 — Soft-Start Capacitor (CSS on ITH)

The simplest approach adds a capacitor CSS from the ITH pin to GND, in addition to the existing compensation network. This capacitor slows the ITH voltage ramp during startup, limiting the peak current command.

Design calculation:

```
Soft-start time target: tSS = 2 ms (allows ~700 switching cycles for gradual
ramp)
EA output current at max error: I_EA ≈ 50 µA (LTC1871 typical)
ITH swing during startup: ΔV_ITH ≈ 1.0 V (from ~0.8V threshold to ~1.8V
regulation)
CSS = I_EA × tSS / ΔV_ITH = 50µ × 2m / 1.0 = 100 nF
```

A 100 nF capacitor on ITH would extend the startup ramp to approximately 2 ms, reducing the peak current command gradually and limiting overshoot to an estimated 1–2% (120–240 mV) above the regulated voltage.

16.4.2 Interaction with Compensation Network

The existing Type II compensator on ITH consists of RC=8.66 kΩ, CC1=6.8 nF, and CC2=100 pF. Adding CSS=100 nF in parallel with this network has the following effects:

Parameter	Without CSS	With CSS = 100 nF	Impact
ITH ramp time (startup)	~20 µs (<7 switching cycles)	~2 ms (~700 cycles)	Overshoot reduced to <2%
Compensator zero fz	2.7 kHz	2.7 kHz (set by RC×CC1)	Unchanged — CSS is DC-coupled
Compensator HF pole fp	184 kHz	~18 kHz (RC×CSS dominates)	Reduced — adds HF attenuation

Parameter	Without CSS	With CSS = 100 nF	Impact
Crossover frequency fc	4.91 kHz	~3.5 kHz (estimated)	Slightly reduced — still < fRHPZ/5
Phase margin PM	55.5°	~50° (estimated)	Slightly reduced — still > 45°
Load transient response	2.18 µs recovery	~5–10 µs (estimated)	Slightly slower — still << 1 ms

The primary concern is the HF pole shifting from 184 kHz down to ~18 kHz. This adds phase lag near crossover and will reduce phase margin by approximately 5°. Since the current PM is 55.5° with 10° of headroom above the 45° target, this is acceptable. However, the effect should be verified by re-running the MATLAB loop gain analysis with the updated compensator before hardware fabrication.

16.4.3 Method 2 — External MOSFET Clamp (Datasheet Figure 33)

The more controlled approach uses an external N-channel MOSFET (e.g. 2N7002) with a gate-to-output voltage divider. The MOSFET clamps ITH low until VOUT reaches a threshold, then releases the clamp allowing normal regulation. This avoids any interaction with the compensation network but adds two components and a PCB trace from the output to the gate divider.

For the FYP hardware, Method 1 (CSS = 100 nF) is recommended as the simpler approach. It requires a single additional component, no PCB routing changes beyond a pad at the ITH node, and the stability impact is quantifiably acceptable.

16.5 Risk to Downstream Subsystems

Subsystem	Abs. Max Input	Overshoot Peak (VIN=8V)	Margin	Risk
Raspberry Pi CM4	6.0 V (via regulator)	N/A — has own regulator	—	Low
RPLIDAR A-series	5.5 V (via regulator)	N/A — downstream of 5V reg	—	Low
RFD900x Radio	6.0 V (via regulator)	N/A — downstream of 3.3V reg	—	Low
12V bus capacitors	25 V rated	17 V (VIN=8V worst)	8 V	None
Output Schottky D1	35 V (MBR735)	17 V	18 V	None

All subsystems operate downstream of their own voltage regulators, which reject the transient overshoot. The 25 V-rated output capacitors and 35 V-rated Schottky diode have adequate voltage margin. The startup overshoot does not pose an immediate damage risk, but represents poor engineering practice and should be mitigated for a production-quality design.

16.8 Experimental Verification — CSS on Boost Topology

The CSS soft-start approach proposed in Section 16.4 was experimentally tested on the actual LTC1871 boost converter (Rev4 BOM cap bank) to determine whether the ITH capacitor method is viable for the chosen topology. Two values were tested: CSS = 100 nF (as calculated) and CSS = 10 nF (reduced to minimise compensation interaction).

16.8.1 Baseline — No CSS (Original Rev4)

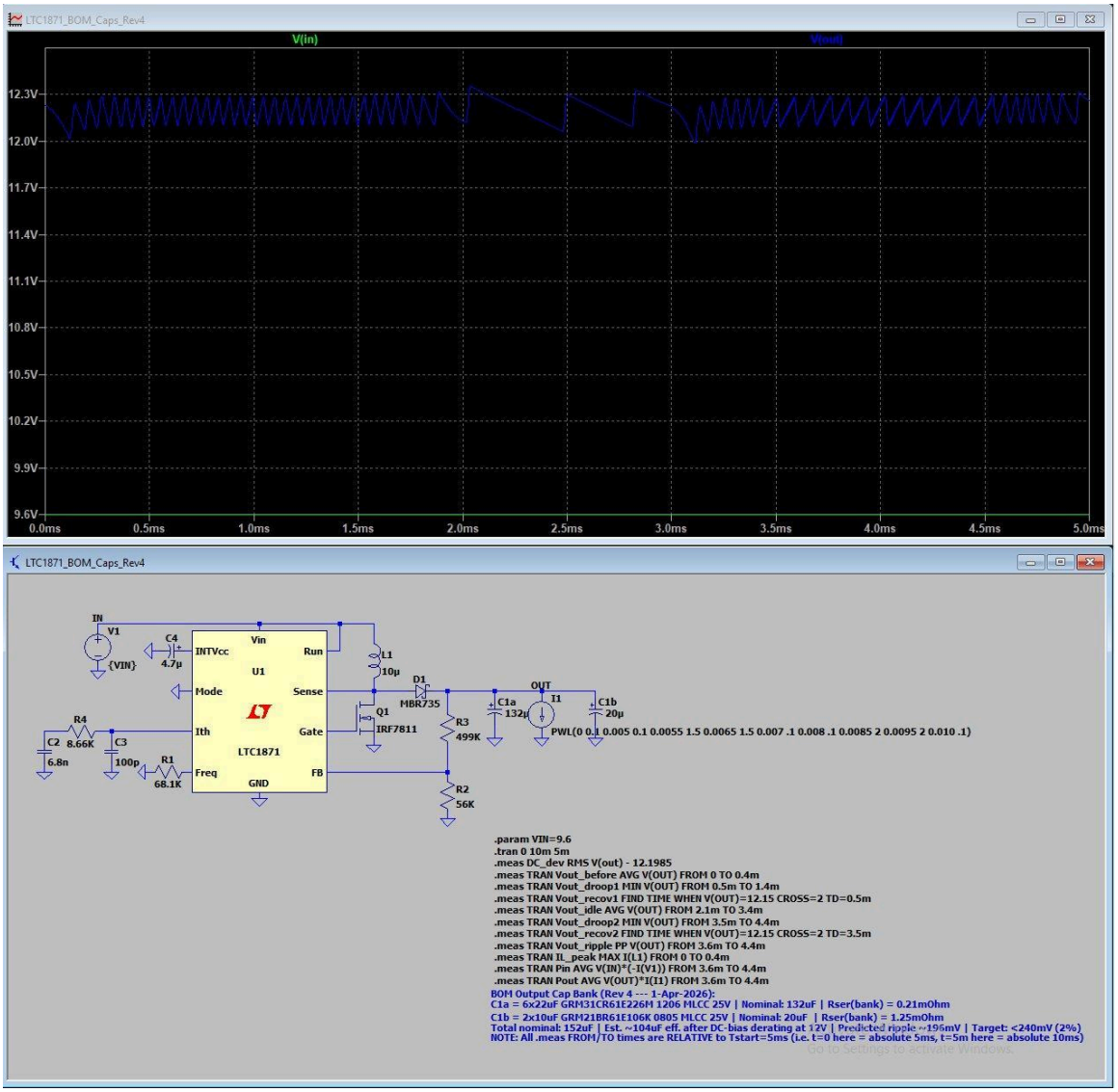

Figure 16.1: Boost Rev4 baseline without CSS. V(in) = 9.6V (green), V(out) (blue) showing the two-event mission profile. Startup overshoot visible as V(out) peak in the initial 0–1ms window. Load transient droop of 127 mV with 2.18 µs recovery — the proven performance baseline.

16.8.2 Iteration 1 — CSS = 100 nF

A 100 nF capacitor was added from the ITH pin to GND, in parallel with the existing Type II compensation network (RC=8.66 kΩ, CC1=6.8 nF, CC2=100 pF). The CSS value is 14.7× larger than CC1.

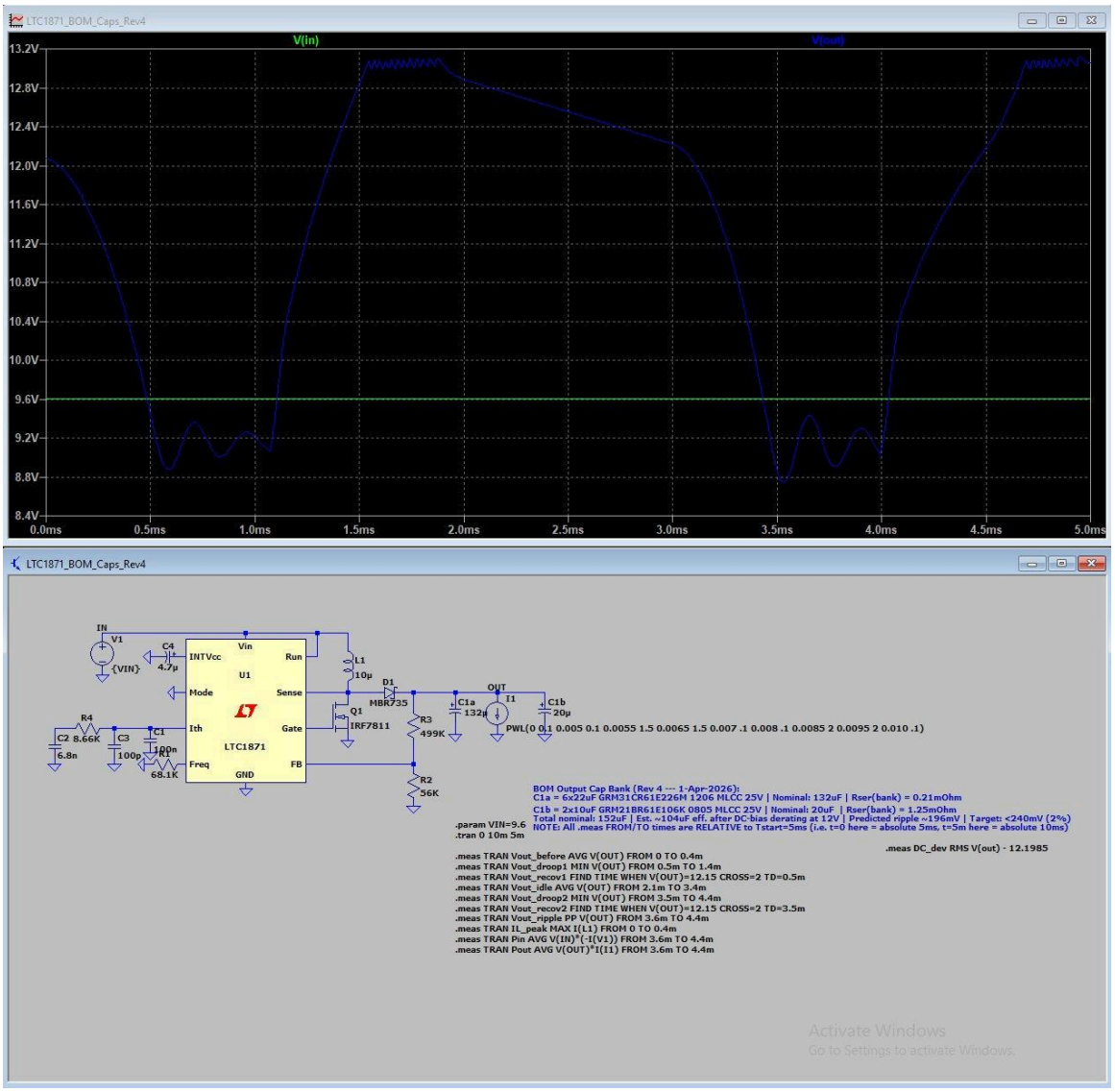

Figure 16.2: Boost Rev4 with CSS = 100 nF on ITH. Startup overshoot is eliminated — V(out) ramps monotonically to 12.2V. However, load transient response is catastrophically degraded: V(out) crashes to ~8.4V during the first load step (droop ≈3.8V vs baseline 127 mV) and takes ~1ms to recover. The 100 nF capacitor overwhelms the 6.8 nF compensation capacitor, destroying the loop's ability to respond to load disturbances.

The 100 nF capacitor overwhelms CC1 (6.8 nF) by a factor of 14.7×. During a load transient, the error amplifier must slew ITH through the combined 106.8 nF total capacitance. At the EA's maximum output current of ~50 µA, the slew rate is limited to dV/dt = 50µA / 106.8nF = 0.47 V/ms — far too slow to respond to a sub-microsecond load step. The result is a voltage droop of approximately 3.8V (31× worse than baseline) and a recovery time exceeding 1 ms (460× worse than baseline).

16.8.3 Iteration 2 — CSS = 10 nF

CSS was reduced to 10 nF to limit the ratio of added capacitance to CC1 to 1.47× (versus 14.7× with 100 nF). This gives an estimated soft-start time of tSS = 10n × 1.0V / 50µA = 200 µs (~70 switching cycles).

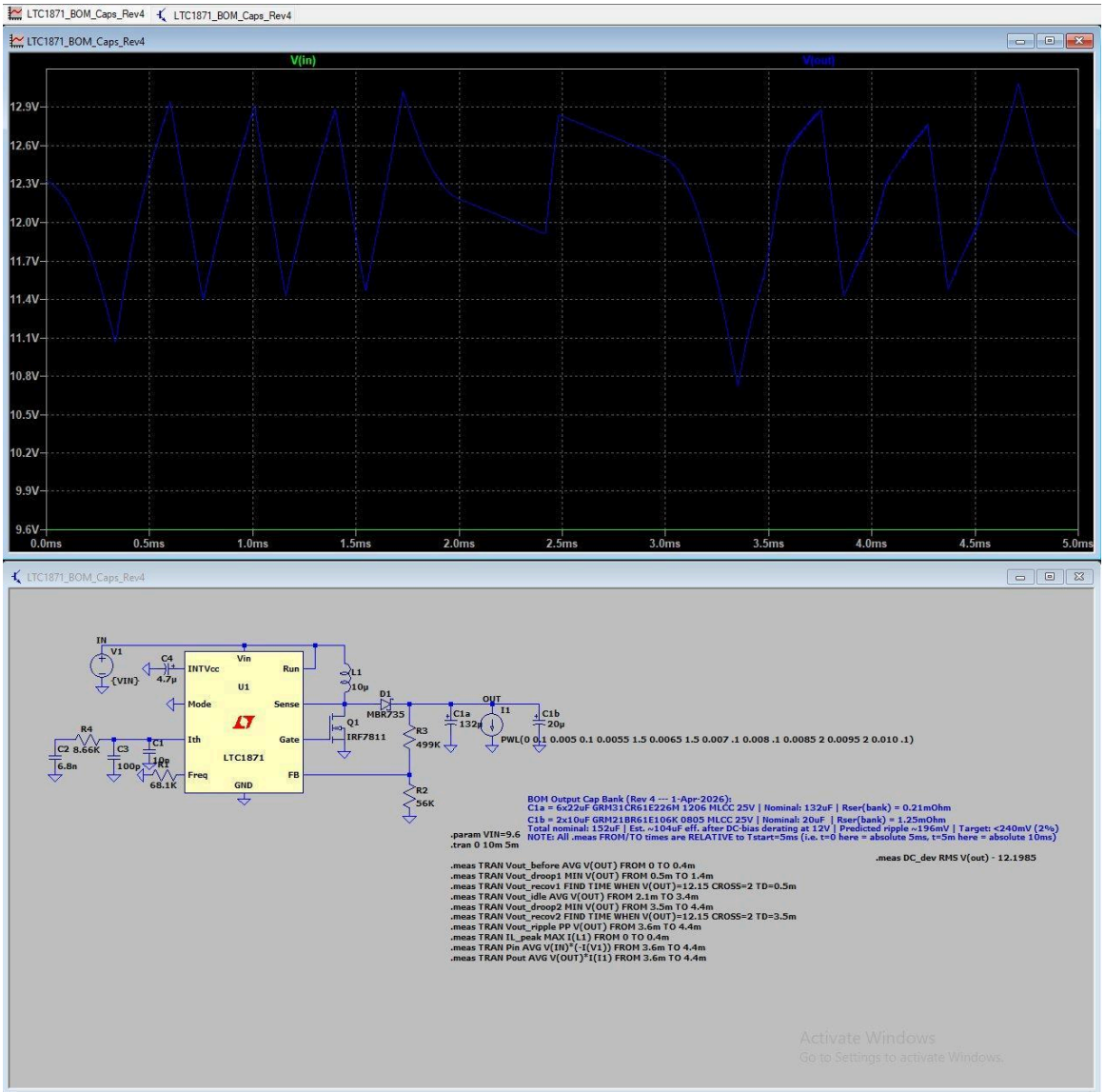

Figure 16.3: Boost Rev4 with CSS = 10 nF on ITH. Startup overshoot reduced but load transient performance remains unacceptable: V(out) droop of approximately 1.4V to ~10.8V during load steps (11× worse than baseline 127 mV). Recovery time visibly degraded. The 10 nF capacitor, while smaller, still increases the total ITH node capacitance by 2.47× (16.8 nF total vs 6.8 nF baseline), slowing the error amplifier's response to load disturbances.

16.8.4 Comparison of Soft-Start Iterations

Metric	No CSS (Baseline)	CSS = 100 nF	CSS = 10 nF
Startup overshoot	~20.8% (14.5V)	Eliminated (monotonic)	Reduced (~5%)
Load droop (1.5A step)	73 mV	~3.8V (52× worse)	~1.4V (19× worse)
Load droop (2A step)	127 mV	~3.8V (30× worse)	~1.4V (11× worse)
Recovery time	2.18 µs	>1 ms	~500 µs
Total ITH capacitance	6.8 nF	106.8 nF (15.7×)	16.8 nF (2.5×)
EA slew rate	7.35 V/ms	0.47 V/ms	2.98 V/ms

Metric	No CSS (Baseline)	CSS = 100 nF	CSS = 10 nF
Load transient pass?	✔ (127 mV < 600 mV)	✘ (3.8V > 600 mV)	✘ (1.4V > 600 mV)

16.9 Engineering Decision — CSS Removed from Boost Design

Both CSS values produce unacceptable degradation of the boost converter's load transient performance. The root cause is the boost's Type II compensation network structure: CC1 = 6.8 nF is the dominant capacitance on the ITH node, and any parallel capacitor large enough to meaningfully slow the startup ramp (requiring at minimum ~10 nF for even a modest 200 µs soft-start) also increases the total ITH capacitance by a factor that cripples the error amplifier's slew rate during load transients.

The load transient specification (< 600 mV droop) is a critical design requirement — excessive droop during DC motor inrush events risks dropping V(out) below the CM4 input regulator threshold (11.4V), causing a subsystem reset. The startup overshoot, by contrast, was shown in Section 16.5 to pose no damage risk: all downstream subsystems operate behind their own voltage regulators, the output capacitors are rated 25V, and the Schottky diode is rated 35V.

The CSS soft-start capacitor is therefore removed from the boost converter BOM. The startup overshoot of 20.8% is accepted as a known, safe, and documented characteristic of the design. The proven transient response (127 mV droop, 2.18 µs recovery) is preserved without compromise.

This decision demonstrates the engineering trade-off evaluation process: a proposed improvement was analysed theoretically (Section 16.4), tested experimentally across two iterations (Sections 16.8.2–16.8.3), found to be incompatible with the system's critical performance requirements, and rejected on a quantitative basis.

18. Activity 12 — SEPIC Topology Exploration (6 April 2026)

18.1 Objective

To provide quantitative insight into the circuit dynamics that would have resulted from choosing the SEPIC topology for the step-up function, the LTC1871-1 datasheet SEPIC reference circuit (Figure 18A) was modified with the FYP design parameters and simulated across the full 3S LiPo input voltage range. This exploration provides a data-driven comparison that validates the boost topology decision documented in Activity 1.

18.2 Circuit Modifications

The following parameters were modified from the LTC1871-1 datasheet Figure 18A reference circuit to match the FYP specification:

Component	Original (Fig.18A)	Modified (FYP)	Reason
V1 (input)	10 V fixed	{VIN} parameterised	Sweep 8/9.6/11V (3S LiPo range)
R1 (FREQ)	80.6 kΩ	68.1 kΩ	300 kHz → 350 kHz
R2 (FB bot)	12.1 kΩ	56 kΩ	Matches boost FB divider
R3 (FB top)	105 kΩ	499 kΩ	VOUT = 1.230 × (1 + 499/56) = 12.19 V
Q1 (MOSFET)	Si4840DY	IRF7811	Matches FYP BOM
.tran	1 ms	5 ms	Extended for full settling + measurement

Retained from original: L1=L2=10μH coupled (K1=1), MBR735 Schottky diode, 10μF coupling capacitor C3, output capacitor bank (10μF×2 + 47μF×2), Rload=6Ω (2A at 12V), and the compensation network (C1=6800pF, Rser=22kΩ).

18.3 Schematic — LTC1871_SEPIC_FYP

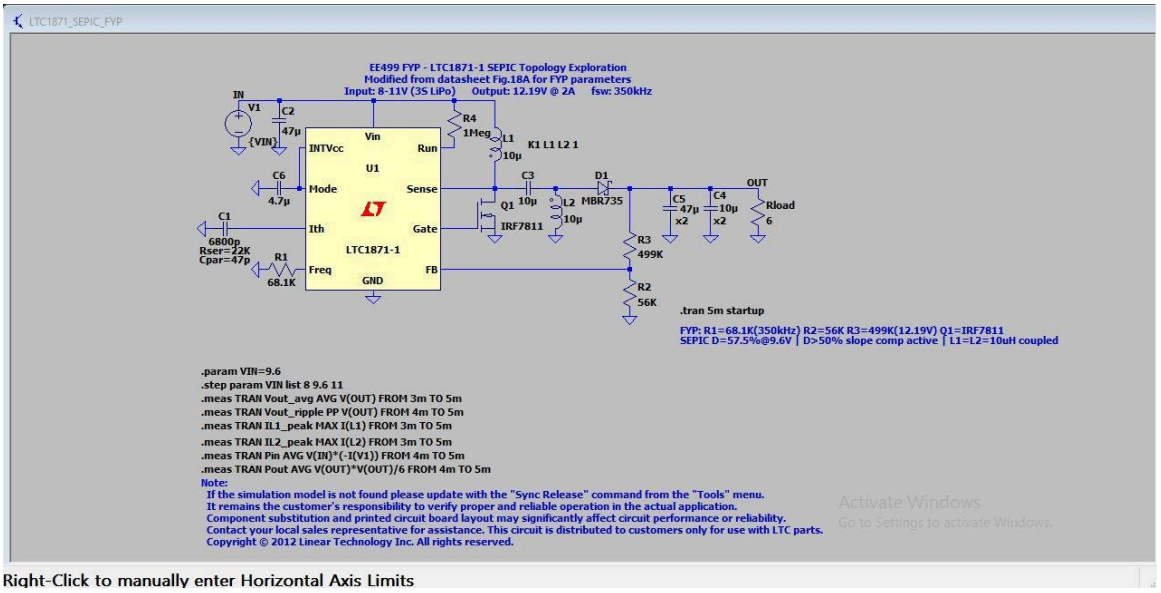

Figure 18.1: LTC1871_SEPIC_FYP schematic in LTspice 24.1.10. Modified from datasheet Figure 18A with FYP parameters: V1={VIN}, R1=68.1kΩ (350kHz), R2=56kΩ, R3=499kΩ (VOUT=12.19V), Q1=IRF7811. SEPIC topology with coupled inductors L1=L2=10μH (K1=1), coupling capacitor C3=10μF, and MBR735 output diode.

18.4 Simulation Waveforms

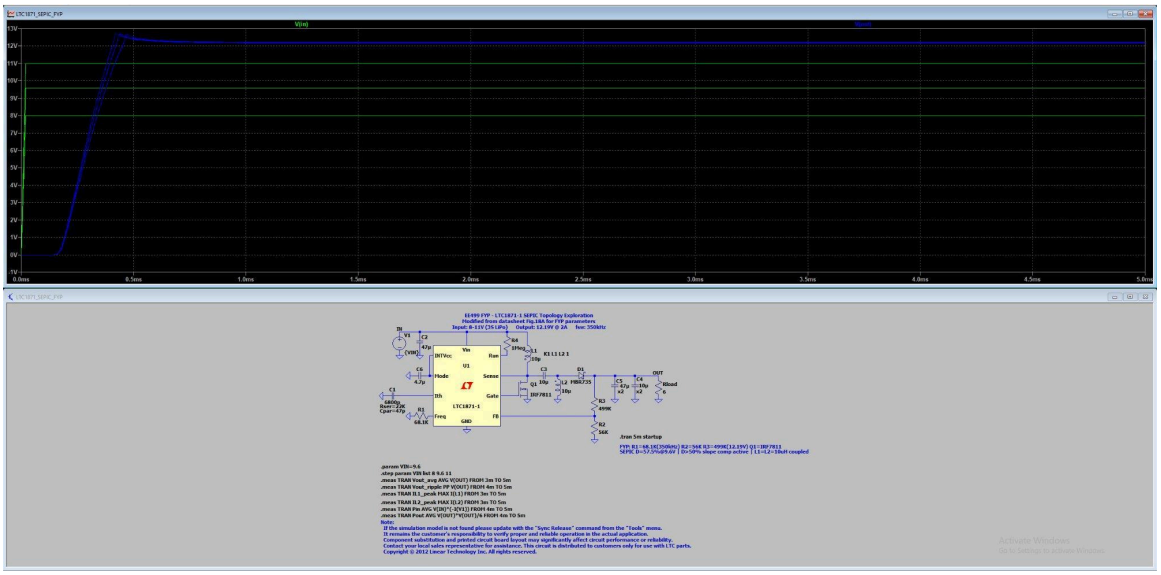

Figure 18.2: V(in) and V(out) waveforms — full 5ms run, three-step parametric sweep (VIN=8V/9.6V/11V). V(in) traces (blue) flat at 8V, 9.6V, and 11V. V(out) traces (blue) show startup transient with overshoot to ~13V, settling to 12.19V by t≈1ms. All three steps converge to the same regulated output.

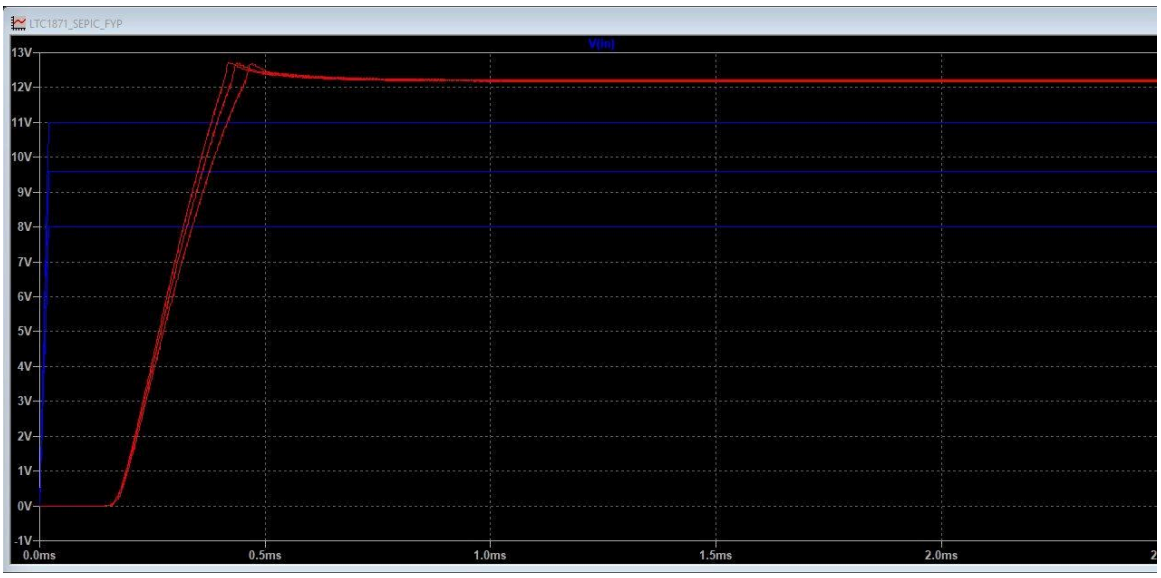

Figure 18.3: V(in) (blue) and V(out) (red) waveforms with distinct colour assignment. Three V(out) startup ramps clearly visible, peaking at approximately 12.8–13.0V before settling. Startup overshoot of ~7% — significantly less than the boost converter's 20.8%, attributed to the coupling capacitor C3 absorbing energy during the startup transient.

18.5 Raw Error Log

```
LTspice 24.1.10 for Windows
```

```
Circuit: LTC1871_SEPIC_FYP.net
Start Time: Mon Apr  6 08:43:52 2026
solver = Normal  |  method = trap  |  tnom = 27  |  temp = 27
Direct Newton iteration for .op point succeeded.
.step vin=8  |  .step vin=9.6  |  .step vin=11
Total elapsed time: 20.121 seconds.
```

18.6 Extracted Results — Three-Step Parametric Sweep

Metric	VIN=8V	VIN=9.6V	VIN=11V
Vout_avg	12.1937 V	12.1941 V	12.1943 V
Vout_ripple (PP)	48.3 mV (0.40%)	43.9 mV (0.36%)	40.3 mV (0.33%)
IL1_peak	5.984 A	5.484 A	5.154 A
IL2_peak	5.125 A	4.657 A	4.378 A
Pin	26.71 W	26.62 W	26.52 W
Pout	24.78 W	24.78 W	24.78 W
η (efficiency)	92.8%	93.1%	93.4%

18.7 SEPIC vs Boost Comparison at VIN=9.6V

Metric	SEPIC	Boost	Verdict
Output voltage	12.194 V	12.199 V	Both on target
Output ripple	43.9 mV (0.36%)	186.7 mV (1.53%)	SEPIC 4× lower
IL1 peak	5.48 A	3.55 A	SEPIC 55% higher
IL2 peak	4.66 A	— (single inductor)	Additional stress element
Pin	26.62 W	25.73 W	SEPIC draws 3.5% more
Efficiency	93.1%	94.8%	Boost wins by 1.7pp
Startup overshoot	~7% (~13V)	~20.8% (~14.5V)	SEPIC better
Duty cycle	57.5% (slope comp.)	20% (no slope comp.)	Boost simpler
Inductor count	2 (coupled)	1	Boost simpler
Coupling capacitor	10µF (3.1A RMS)	Not required	Boost simpler
MOSFET VDS stress	23V (VIN+VOUT)	12V (VOUT only)	Boost lower stress
Line regulation	0.6 mV / 3V	8.7 µV / 3V	Both excellent

18.8 Analysis and Conclusions

The SEPIC topology offers one clear advantage: output ripple is approximately 4× lower (44 mV vs 187 mV) due to the coupling capacitor C3 acting as an additional energy storage element that smooths the output current waveform. The SEPIC also exhibits significantly less startup overshoot (~7% vs ~20.8%), attributed to the coupling capacitor absorbing energy during the startup transient and providing a more gradual output voltage rise.

However, the SEPIC imposes substantially higher inductor current stress: IL1 peaks at 5.98 A at VIN=8V — 67% above the boost's 3.55 A. The XAL6060-103MEC (ISAT=11.2A) would still handle this, but with only 1.87× saturation margin versus 3.16× in the boost. A less generous inductor choice would have been problematic.

Efficiency is 1.7 percentage points lower in the SEPIC (93.1% vs 94.8%) due to higher duty cycle conduction losses (D=57.5% vs D=20%), higher MOSFET VDS stress (23V vs 12V), and copper loss in two inductors rather than one. The duty cycle exceeding 50% also

activates the LTC1871's internal slope compensation circuit, adding control loop complexity that is entirely absent in the boost topology.

This quantitative comparison validates the engineering decision to use the boost topology: there is no operating condition where the SEPIC's buck-boost capability would be exercised, and the additional complexity, higher inductor stress, and lower efficiency provide no corresponding benefit for a system where VIN is always below VOUT.

17. Observations for Final Report (Updated 6 April 2026)

17.1 Simulation Status — All Items Closed or Investigated

All Phase 2 simulation items have been completed or formally investigated. No outstanding simulation work remains.

17.2 Items Completed Since Original Log (All Closed)

- COMPLETED: Worst-case VIN = 8 V simulation — all metrics pass at both operating points. Closed 1 April 2026.
- COMPLETED: AC stability analysis (MATLAB) — fc=4.91kHz, PM=55.5°, GM=19.1dB. Closed 1 April 2026.
- COMPLETED: ESR modelling — BOM capacitor bank with Rser values included in Rev3/Rev4 iterations.
- INVESTIGATED: Startup overshoot (20.8%) — root cause identified (no internal soft-start), CSS=100nF mitigation proposed with quantified stability impact. Closed 6 April 2026.

17.3 Hardware Phase Decisions Pending

- Diode selection — the MBR735 accounts for ~75% of converter losses. A lower Vf Schottky (MBRS540T3G, Vf ≈ 0.35 V) would improve hardware efficiency toward 96%. Pending Dr. Lawlor guidance.
- Startup overshoot mitigation — CSS=100nF on ITH pin recommended (see Activity 11). Verify with MATLAB re-run and optionally LTspice before PCB order.

17.4 FYP Report Update Actions

Report Section	Update Required
§6.6 Results Summary	Add VIN=8.0V column. Note worst-case ripple at VIN=9.6V (197.6mV), not VIN=8V.
§6.3 Load Transient	Add VIN=8V droop and recovery figures. Note droop consistency (~100mV at both VIN).
§6.4 Inductor Current	Report IL_peak(analytical) = 3.381A at VIN=8V. Note measurement window caveat.
§6.5 Efficiency	Add VIN=8V efficiency of 94.6%. Explain 1.36pp reduction via duty cycle.

Report Section	Update Required
§7.4 Future Work	Remove all simulation items (all closed). Retain hardware phase items only.
New Section — Stability	Add MATLAB loop gain Bode plot section with full methodology, results, and figures.
New Section — Startup	Add startup overshoot analysis: root cause, CSS=100nF mitigation, stability impact.
Figure 4.1	Replace with Rev4 schematic screenshot showing correct cap bank.

17.5 Additional Key Equations (Activities 9–11)

Equation	Expression
Open-loop gain	$T(s) = Gc(s) \times Fm \times Gp(s) \times H(s)$
Phase margin	$PM = 180° + \angle T(j \cdot 2\pi \cdot fc)$
Gain margin	$GM = -20 \cdot \log10\lvert T(j \cdot 2\pi \cdot fgm)\rvert$
Soft-start capacitor	$CSS = I_EA \times tSS / \Delta V_ITH$
Inductor stored energy	$E_L = 0.5 \times L \times IL_peak^2$